Controller

For Set-Point Control use Auber Syl-2372
For Ramp and Soak use Syl-2372P

Single Phase Kiln
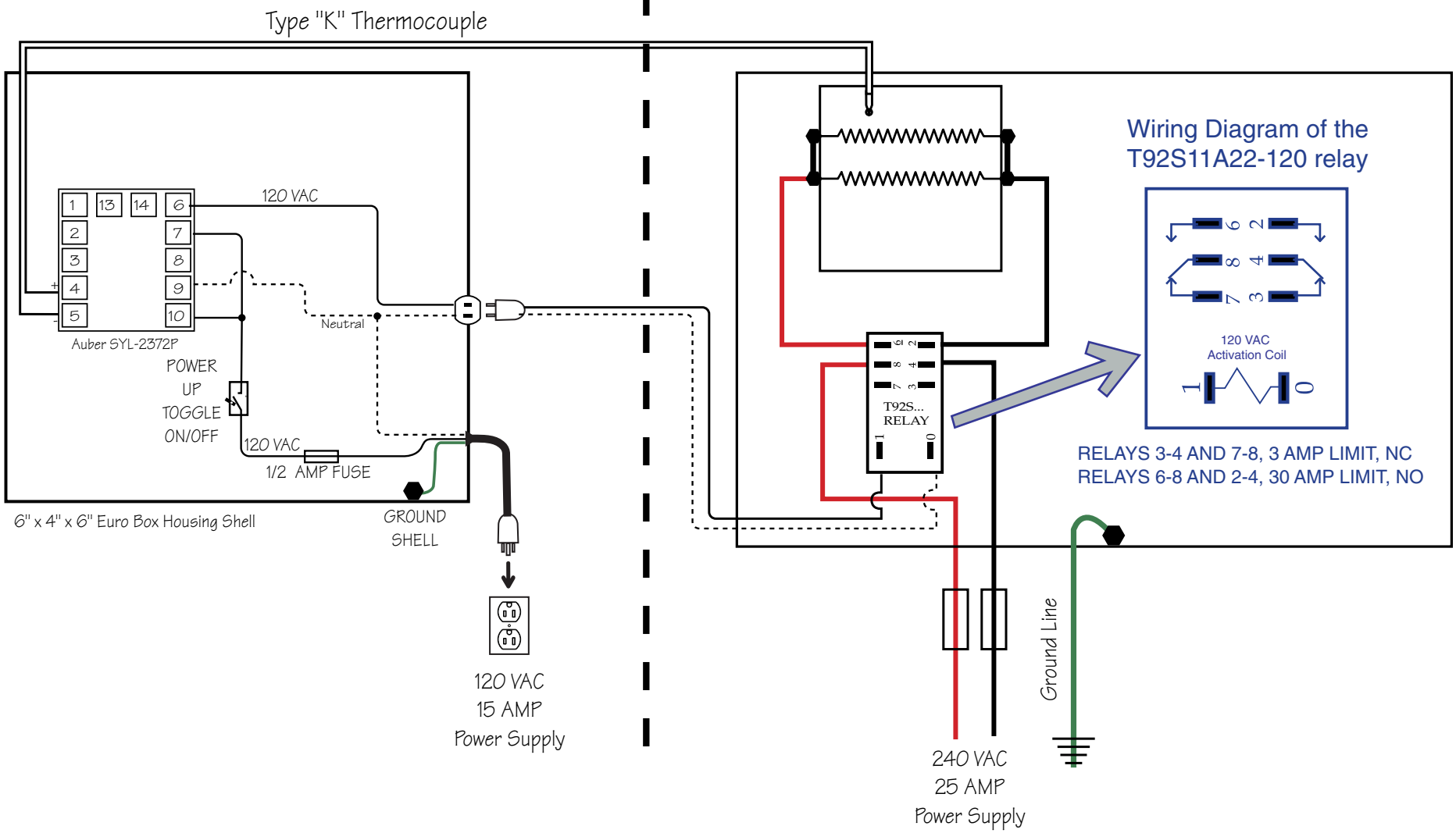
2 E240-10-158 Elements
Kiln Draws 20 Amps